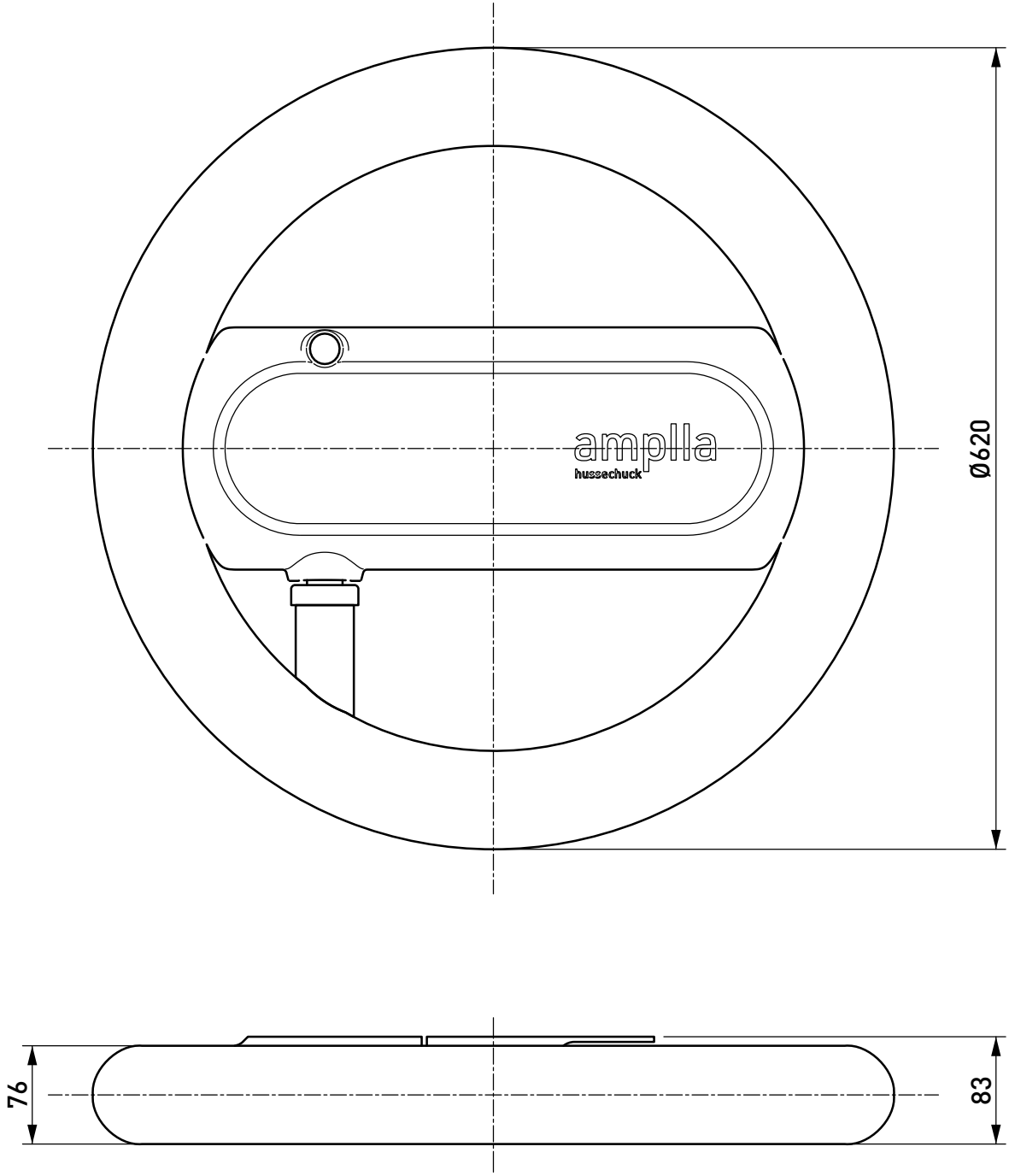
amplla
hussechuck
Ø620
76
83